Date: 120809	Sign. SJO	Scale: 1:40	No. T11327

UPLIFTING COMPANY

AUTOP STENHOJ

Major 4030-47WL /
Major 5230-47WL
(4000 kg/5200 kg)
Rev. date: 060514
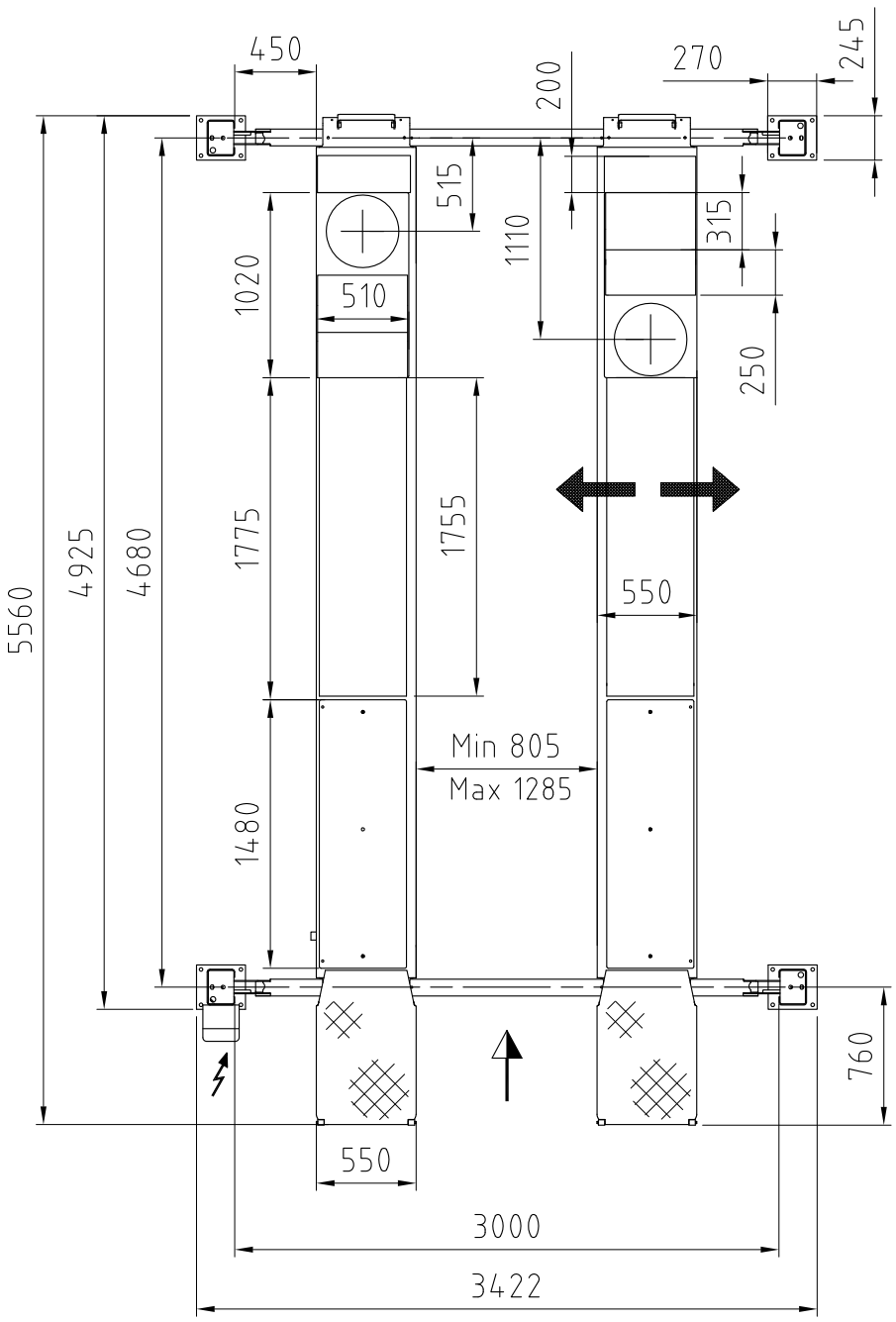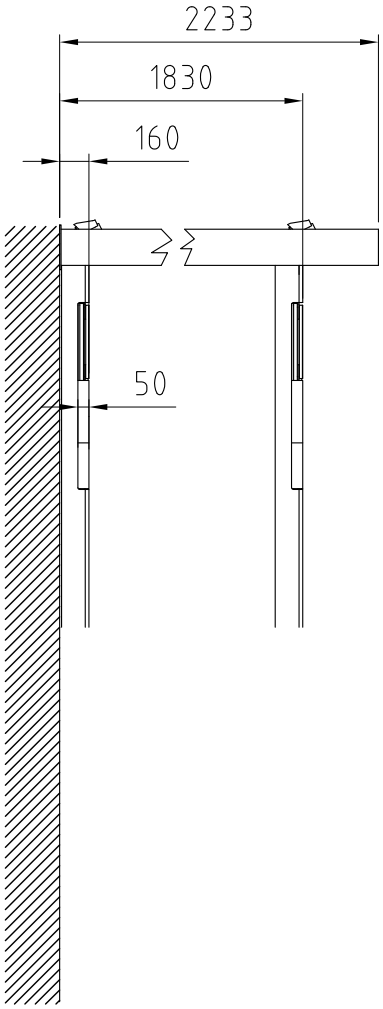
Note! Turn tables are not included in the delivery. Must be purchased locally.